The Aqua Vision Tech Aquarium

PROJECT #1312

GENERAL NOTES:
1. BOTH AQUARIUMS TO BE TWO SIDED VIEWING, AND INSTALLED IN SPECIFIED LOCATION.

2. BOTH AQUARIUMS TO BE APPROXIMATELY 1450 GALLONS AND AN APPROXIMATE TOTAL WATER WEIGHT OF 12,100 LBS.

3. ALL ENGINEERING, SLAB SHORING, AND FOUNDATION WORK BELOW AQUARIUM TO BE COMPLETED BY CONTRACTOR.

4. CLEAR ACCESS TO INSTALLATION SITE TO BE PROVIDED AT TIME OF AQUARIUMS INSTALLATION.

5. ALL ELECTRIC TO BE SUPPLIED BY CONTRACTOR PRIOR TO AQUARIUMS INSTALLATION.

6. ELECTRIC CONTRACTOR IS RESPONSIBLE FOR ALL CODE COMPLIANCE ISSUES.

7. ALL RECOMMENDATIONS OR CHANGES TO ELECTRIC DESIGNS MUST BE SUBMITTED TO LIVING COLOR FOR APPROVAL PRIOR TO COMMENCEMENT OF ANY WORK.

8. ALL DESIGN CHANGES BY OWNER'S CONTRACTORS TO BE APPROVED BY OWNER AND SUBMITTED TO LIVING COLOR FOR APPROVAL PRIOR TO COMMENCEMENT OF ANY WORK.

9. ALL LIFE SUPPORT AREAS TO BE KEPT AT A MAXIMUM OF 78°F AT ALL TIMES.

10. ALL AQUARIUM-PLUMING LINES FROM AQUARIUMS AREAS TO FILTRATION AREA MUST BE NO GRATER THAN 12" UNDER SLAB AND FREE FROM AIRLOCK. IT IS THE PLUMBERS RESPONSIBILITY TO ADHERE TO THIS REQUEST. LIVING COLOR WILL NOT BE LIABLE FOR ANY AIRLOCK AND OR COSTS ASSOCIATED THEREIN. PLEASE CONSULT WITH YOUR LIVING COLOR PROJECT MANAGER FOR MORE CLARIFICATION IF NEEDED.

11. WATER PRESSURE IN COPPER LINES TO THE HEAT EXCHANGER MUST OPERATE BETWEEN
A MIN. OF 4 PSI AND A MAX. OF 40 PSI

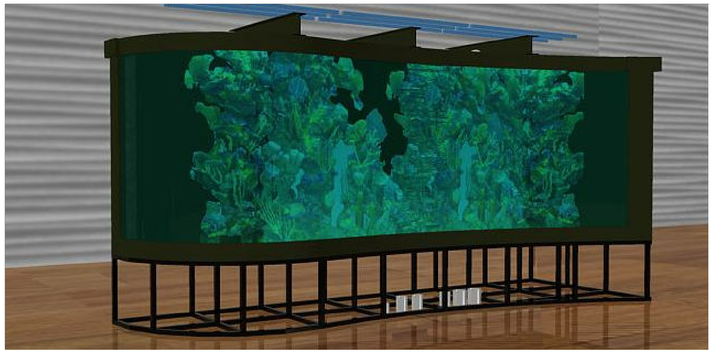

AQUARIUM
ISOMETRIC VIEW
SCALE: N.T.S.
01
A-01

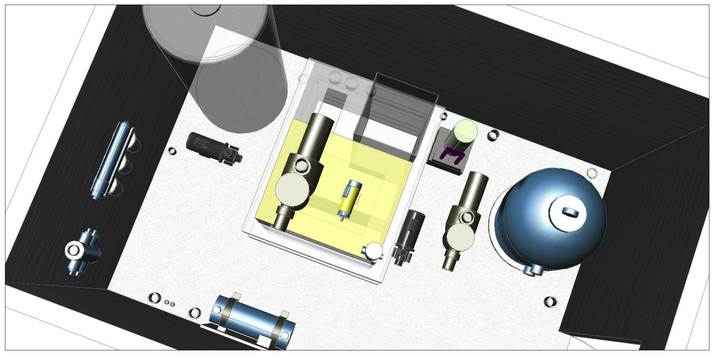

LLS EQUIPMENT
PLAN VIEW
SCALE: 3/16"=1'-0"
02
A-01

LIVING COLOR MANUFACTURES TO THE FOLLOWING TOLERANCES, UNLESS OTHERWISE SPECIFIED ON DRAWING.

- ACRYLIC PANEL THICKNESS ± 3/16”
- ACRYLIC PANEL THICKNESS & DIMENSIONS AS PER SUPPLIER DRAWINGS
- ACRYLIC AQUARIUM DIMENSIONS ± 1/4”
- STEEL STAND DIMENSIONS ± 1/4”
- FRP AQUARIUM SHELL DIMENSIONS ± 1/2”
- ALL FRP SPECIFIED CRITICAL DIMENSIONS ARE EXTERIOR DIMENSIONS
- ALL FRP INTERIOR DIMENSIONS ARE FOR REFERENCE ONLY
- FRP DEFLECTION TO BE LESS THAN 1/20"
- FILLETS AND ROUNDS ON ALL CORNERS OF FRP TANKS TO BE DETERMINED BY FRP MANUFACTURER
- FRP SHELL THICKNESSES:
  - BOTTOM 0.25” ~ 0.75” ± 1/8”
  - SIDES & BACK 2.00” ± 1/8” CONFIRM
  - TOP & WINDOW FLANGES 0.75” ±1/8”
  - FRP TANK GEL COAT TO BE 18 ~ 25 MIL DETERMINED BY FRP MANUFACTURER
- ALL LIFE SUPPORT EQUIPMENT AND PLUMBING DIMENSIONS ARE FOR REFERENCE ONLY
- ALL AQUARIUM PLUMBING, REEF, AND BULKHEAD PENETRATION DIMENSIONS ARE FOR REFERENCE ONLY

DRAWING LIST

DRWG NO :	DESCRIPTION :	REVISION :
A-01	COVER SHEET / DRAWING LIST & GENERAL NOTES	
A-02	AQUARIUM TANK DETAILS	
A-03	STAND DETAILS	
A-04	IN TANK PLUMBING	
A-05	IN TANK CORAL DETAIL	
A-06	LIFE SUPPORT EQUIPMENT & PLUMBING DETAILS	
A-07	ELECTRIC SPECIFICATIONS & DETAILS	
A-08	LSS FLOW CHART	

Designed By : EGS
Project Manager : BA
LSS Design By : JM
Approved By : MR

Notes : DRAFTED BY,
STEVENSON DRAFTING &
DESIGN SERVICES L.L.C.

Approval :

Client : The Aqua Vision Tech Aquarium
Location : 35 Chestnut Street
East Bridgewater, MA 02333
Contractor : -

LIVING COLOR™
CUSTOM AQUARIUMS AND THEMED ENVIRONMENTS
* EXHIBITRY * THEMED ENVIRONMENTS
* ARCHITECTURAL AQUARIUM SYSTEMS
6861 SW 196th Ave. Ft. Lauderdale, FL 33289
(954) 970-0451 Fax (954) 978-3811

Description : Cover Sheet
-

Date : 04-24-13
Scale : AS NOTED
Revision # -
Drawing # 1 OF 8

Job # 1312
Auto cad # A-01
Sheet # A-01

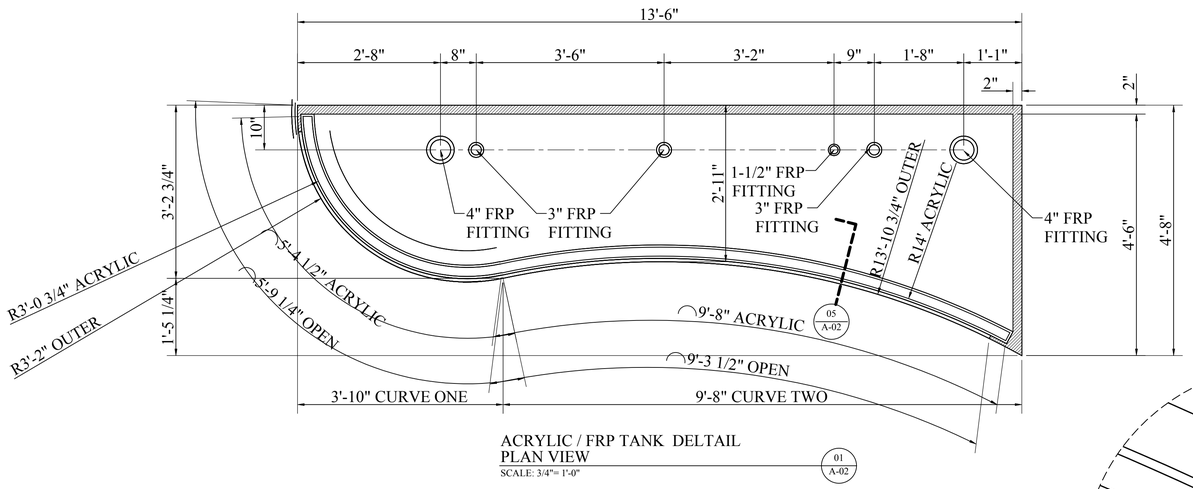

ACRYLIC / FRP TANK DELTAIL
PLAN VIEW
SCALE: 3/4"= 1'-0"

01 A-02

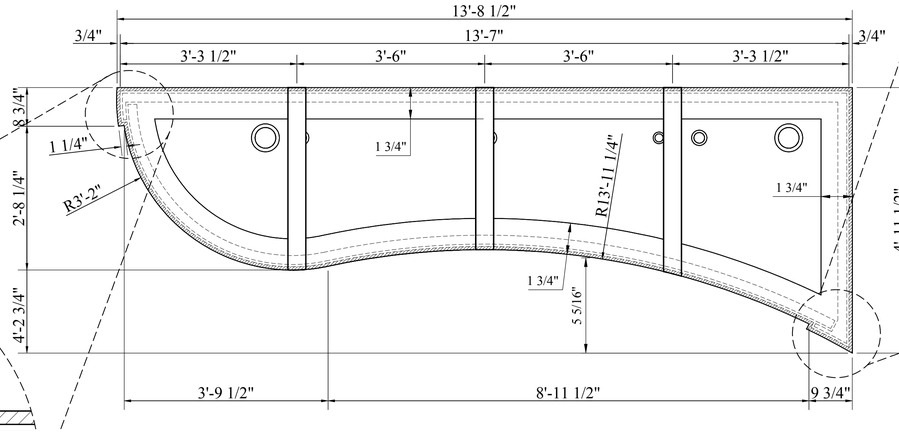

FRP CORNER DETAIL
PLAN VIEW
SCALE 3" =1"

04 A-02

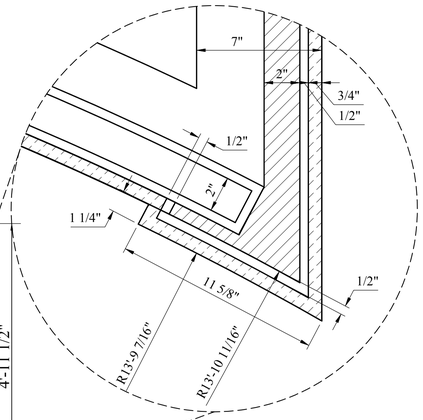

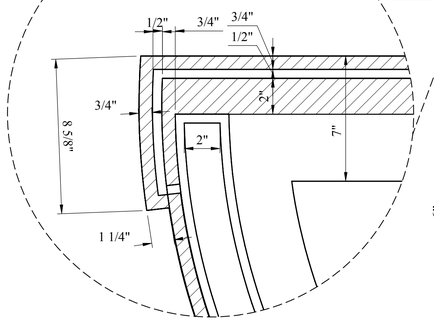

FRP CORNER DETAIL
PLAN VIEW
SCALE 3" =1"

04 A-02

FRP COLLER DETAIL
PLAN VIEW
SCALE: 3/4"= 1'-0"

02 A-02

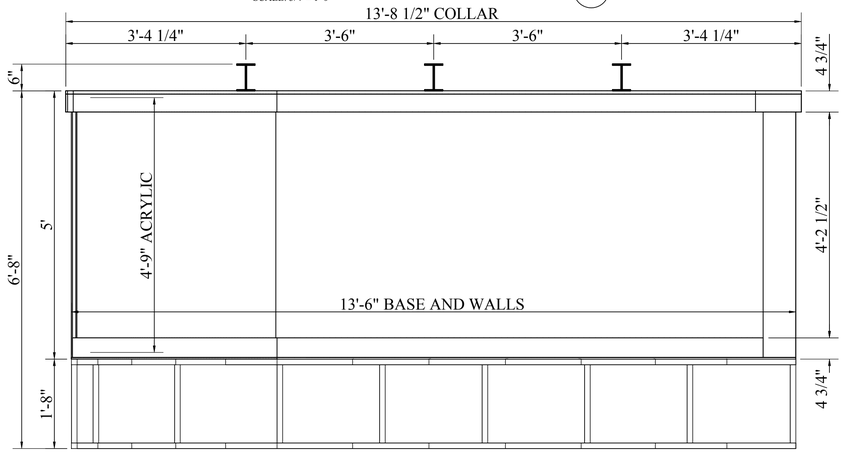

ACRYLIC / FRP TANK
FRONT ELEVATION
SCALE: 3/4"= 1'-0"

03 A-02

ACRYLIC / FRP TANK W/STAND
SIDE ELEVATION
SCALE: 3/4"= 1'-0"

03 A-02

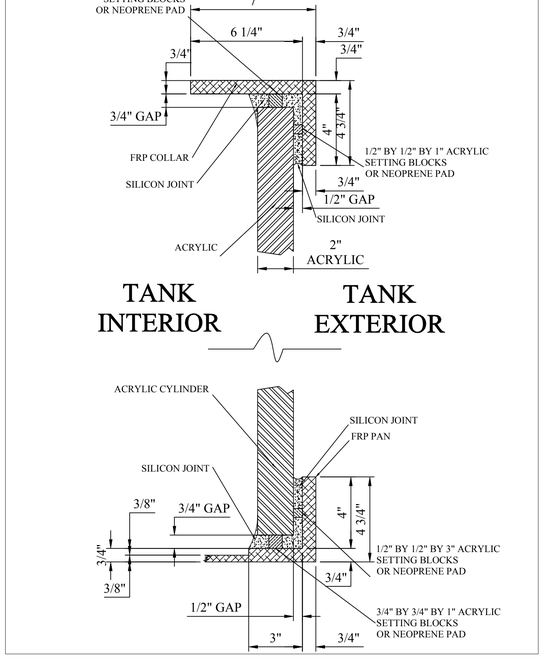

ACRYLIC PANEL INSTALLATION
DETAIL SECTION
SCALE 3" =1"

05 A-02

LIVING COLOR MANUFACTURES TO THE FOLLOWING TOLERANCES, UNLESS OTHERWISE SPECIFIED ON DRAWING.

- ACRYLIC PANEL THICKNESS ± 3/16”
- ACRYLIC PANEL THICKNESS & DIMENSIONS AS PER SUPPLIER DRAWINGS
- ACRYLIC AQUARIUM DIMENSIONS ± 1/4”
- STEEL STAND DIMENSIONS ± 1/4”
- FRP AQUARIUM SHELL DIMENSIONS ± 1/2”
- ALL FRP SPECIFIED CRITICAL DIMENSIONS ARE EXTERIOR DIMENSIONS
- ALL FRP INTERIOR DIMENSIONS ARE FOR REFERENCE ONLY
- FRP DEFLECTION TO BE LESS THAN 1/20"
- FILLETS AND ROUNDS ON ALL CORNERS OF FRP TANKS TO BE DETERMINED BY FRP MANUFACTURER
- FRP SHELL THICKNESSES:
  - BOTTOM 0.25” ~ 0.75” ± 1/8”
  - SIDES & BACK 2.00” ± 1/8” CONFIRM
  - TOP & WINDOW FLANGES 0.75” ±1/8”
  - FRP TANK GEL COAT TO BE 18 ~ 25 MIL DETERMINED BY FRP MANUFACTURER
- ALL LIFE SUPPORT EQUIPMENT AND PLUMBING DIMENSIONS ARE FOR REFERENCE ONLY
- ALL AQUARIUM PLUMBING, REEF, AND BULKHEAD PENETRATION DIMENSIONS ARE FOR REFERENCE ONLY

Designed By : EGS
Project Manager : BA
LSS Design By : JM
Approved By : MR

Notes : DRAFTED BY, STEVENSON DRAFTING & DESIGN SERVICES L.L.C.

Approval :

Client : The Aqua Vision Tech Aquarium

Location : 35 Chestnut Street, East Bridgewater, MA 02333

Contractor : - -

LIVING COLOR™
CUSTOM AQUARIUMS AND THEMED ENVIRONMENTS
* EXHIBITRY * THEMED ENVIRONMENTS
* ARCHITECTURAL AQUARIUM SYSTEMS
6850 NW 12th Ave. Ft. Lauderdale Fl. 33309
(954) 970-2451 Fax (954) 978-3411

Description : FRP & Acrylic Tank Custom Aquarium

Date 04-24-13
Scale AS NOTED
Revision # -
Drawing # 2 OF 8

Job # 1312
Auto cad # A-01
Sheet # A-02

NOTE:

1/ . STEEL TO BE 1.25" TUBULAR STEEL.

2/. APPLYED BLACK RUST PROTECTION

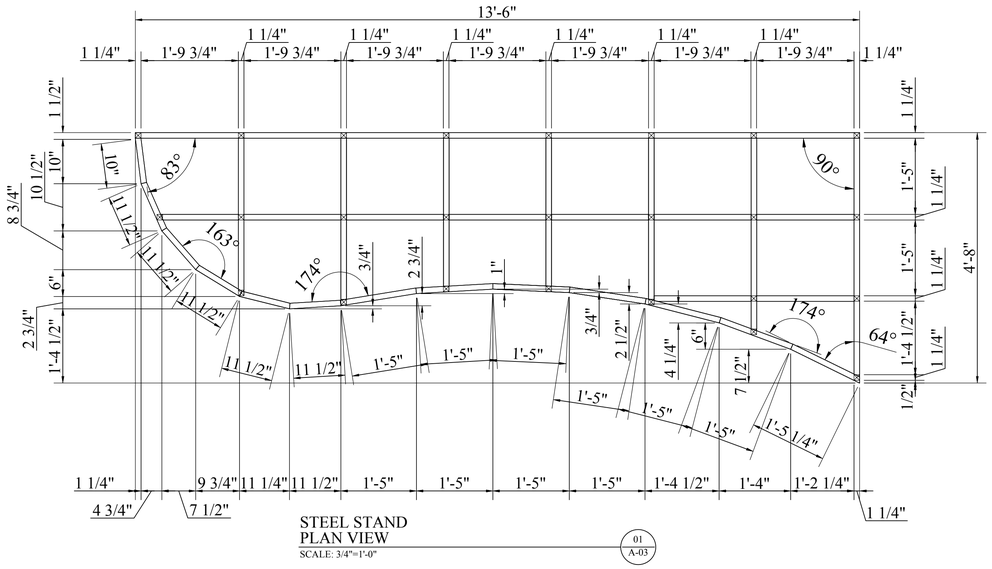

STEEL STAND
PLAN VIEW
SCALE: 3/4"=1'-0"

01
A-03

STEEL STAND
FRONT ELEVATION
SCALE: 3/4"=1'-0"

02
A-03

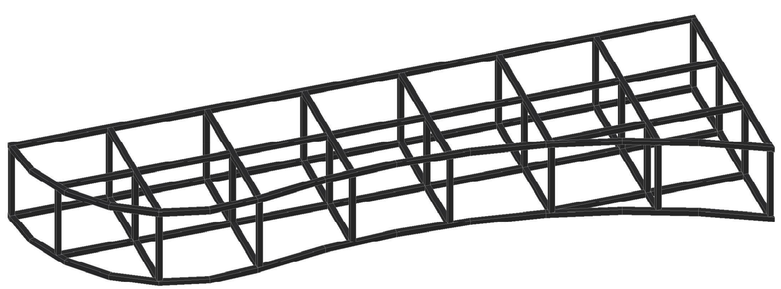

STEEL STAND
ISOMETRIC VIEW
SCALE N.T.S.

03
A-03

EGS
Designed By :
BA
Project Manager :
JM
LSS Design By :
MR
Approved By :

Notes :

DRAFTED BY,
STEVENSON DRAFTING &
DESIGN SERVICES L.L.C.

Approval :

Client :
The Aqua Vision Tech Aquarium

Location :
35 Chestnut Street
East Bridgewater , MA 02333
-
-

Contractor :

LIVINGCOLOR™
CUSTOM AQUARIUMS AND THEMED ENVIRONMENTS
* EXHIBITRY * THEMED ENVIRONMENTS
* ARCHITECTURAL AQUARIUM SYSTEMS
6830 NW 12th Ave. Ft. Lauderdale Fl. 33309
(954) 970-9551 Fax (954) 978-5811

Description :
Steel Stand
Custom Aquarium

Date 04-24-13
Scale AS NOTED
Revision # -
Drawing # 3 OF 8

Job # 1312
Auto cad # A-01
Sheet # A-03

IN-TANK PLUMBING SPECIFICATIONS

Description		Qty:	Material Description	Port Height	Port Fitting
A	Open Intakes	2	4"PVCSCH40		
B	Open Returns	1	3"PVCSCH40		
C	Closed Suctions	1	3"PVCSCH40		
D	Closed Returns	1	3"PVCSCH40		
E	Feeding Line	1	1 1/2"PVCSCH40		

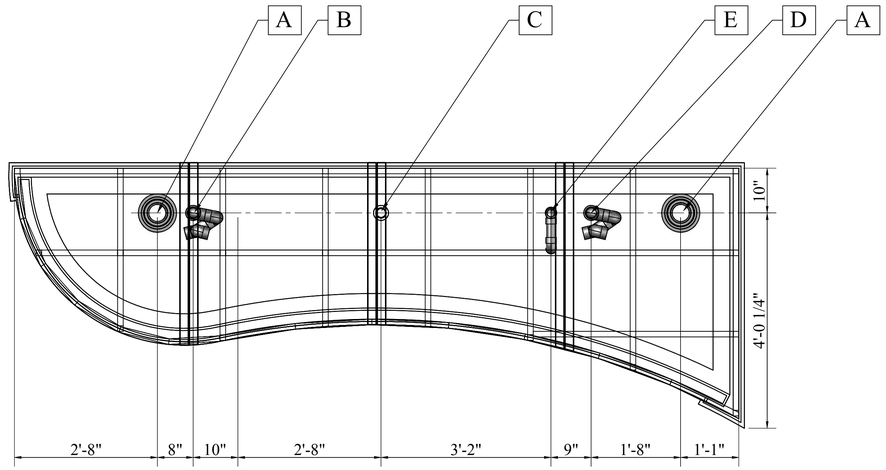

IN TANK PLUMBING
PLAN VIEW
SCALE: 3/4"=1'-0"

01
A-04

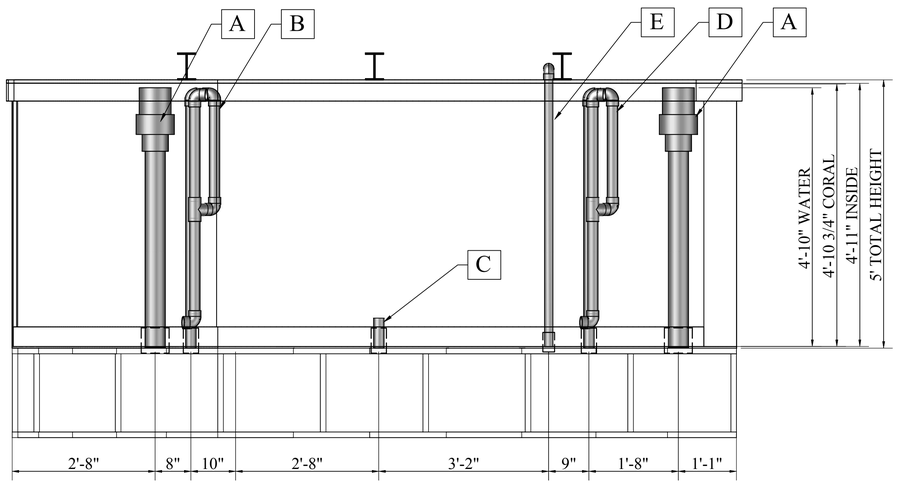

IN TANK PLUMBING
ELEVATION VIEW
SCALE: 3/4"=1'-0"

02
A-04

Designed By : EGS
Project Manager : BA
LSS Design By : JM
Approved By : MR

Notes :
DRAFTED BY,
STEVENSON DRAFTING &
DESIGN SERVICES L.L.C.

Approval :

Client :
The Aqua Vision Tech Aquarium

Location :
35 Chestnut Street
East Bridgewater, MA 02333

Contractor :
-
-

LIVINGCOLOR™
CUSTOM AQUARIUMS AND THEMED ENVIRONMENTS
* EXHIBITRY * THEMED ENVIRONMENTS
* ARCHITECTURAL AQUARIUM SYSTEMS
6850 SW 12th Ave - Ft. Lauderdale Fl. 33309
(954) 370-9541 Fax (954) 370-5811

Description
In Tank Plumbing
Custom Aquarium

Date 04-24-13
Scale AS NOTED
Revision # -
Drawing # 4 OF 8

Job # 1312
Auto cad # A-01
Sheet # A-04

SCULPTURE PARAMETERS

Sculpt type: Backdrop

Color:

Coral preferences:

Notes:

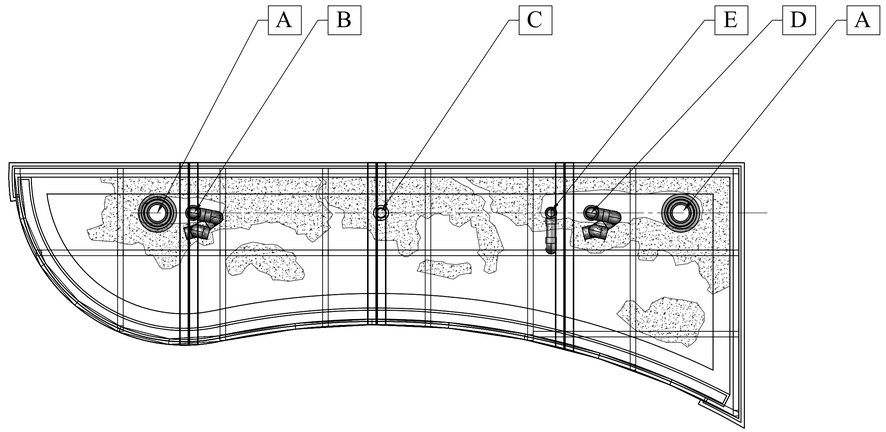

CORAL
PLAN VIEW
SCALE: 3/4"=1'-0"

01
A-05

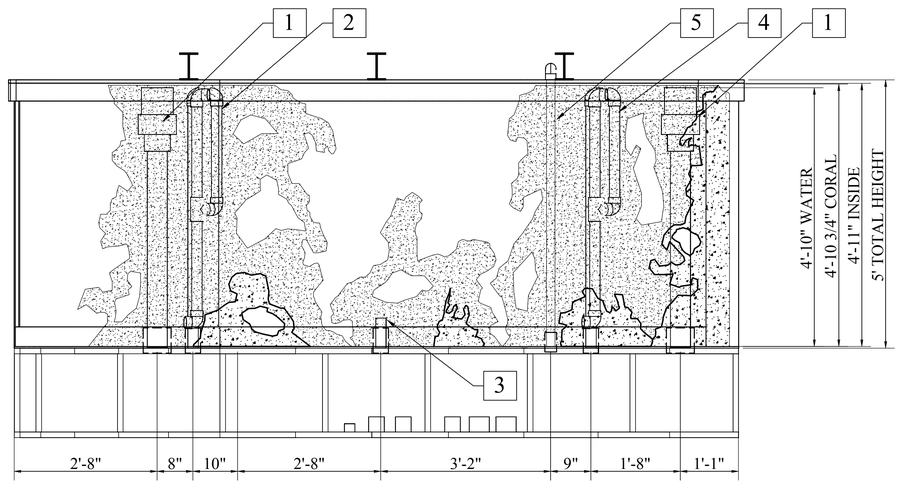

CORAL
ELEVATION VIEW
SCALE: 3/4"=1'-0"

02
A-05

Designed By : EGS
Project Manager : BA
LSS Design By : JM
Approved By : MR

Notes :
DRAFTED BY,
STEVENSON DRAFTING &
DESIGN SERVICES L.L.C.

Approval :

Client :
The Aqua Vision Tech Aquarium

Location :
35 Chestnut Street
East Bridgewater, MA 02333

Contractor :
-
-

LIVING COLOR™
CUSTOM AQUARIUMS AND THEMED ENVIRONMENTS
* EXHIBITRY * THEMED ENVIRONMENTS
* ARCHITECTURAL AQUARIUM SYSTEMS
6850 SW 12th Ave - Ft. Lauderdale Fl. 33309
(954) 970-9541 Fax (954) 970-5811

Description
In Tank Coral
Custom Aquarium

Date 04-24-13
Scale AS NOTED
Revision # -
Drawing # 5 OF 8

Job # 1312
Auto cad # A-01
Sheet # A-05

REMOTE LIFE SUPPORT ROOM (LSS) TO AQUARIUM PLUMBING

	Description	Qty:	Material Description	Location
A	Open Intakes	2	4"PVCSCH40	
B	Open Returns	1	3"PVCSCH40	
C	Closed Suctions	1	3"PVCSCH40	
D	Closed Returns	1	3"PVCSCH40	
E	Feeding Line	1	1 1/2"PVCSCH40	
F	Drain To Waste	1	2"PVCSCH40	
G	Floor Drain	2	3" Floor Drain	
H	Chilled Water Lines	2	3/4" Copper Fipt	Supply/Return
I	Closed Ret. Inter Connect	1	3"PVCSCH40	Under Floor Between Filter & Heat Exchanger

NOTE:

1. ALL PLUMBING BETWEEN AQUARIUM AND LIFE SUPPORT EQUIPMENT ROOM TO BE INSTALLED BY OWNER'S PLUMBING CONTRACTOR PRIOR TO AQUARIUM INSTALLATION.

2. PLUMBING STUBS THROUGH FLOOR TO BE PLACED WITHIN SPECIFIED AREAS PROVIDED ONLY. LOCATION CHANGES TO BE SUBMITTED TO LIVING COLOR FOR APPROVAL PRIOR TO COMMENCEMENT OF ANY WORK.

3. ARRANGEMENT OF PIPES WITHIN CHASE MAY VARY PENDING CONTRACTOR REVIEW AND APPROVAL BY LCEI PROJECT MANAGER.

4. ALL PLUMBING BETWEEN AQUARIUM AND LIFE SUPPORT EQUIPMENT TO BE TO LOCATION CODES.

5. ALL PLUMBING BETWEEN AQUARIUM AND LIFE SUPPORT EQUIPMENT ROOM TO BE CAPPED AND PRESSURE TESTED TO 50 PSI AND LEFT PRESSURIZED UNTIL AQUARIUM INSTALLATION

6. LIVING COLOR TO HOOK UP TO PLUMBING STUB PENETRATIONS THROUGH WALL.

7. 3" MIN. ALLOWANCE BETWEEN PLUMBING STUBS IS TYPICAL.

8. ANY EXISTING CONDITIONS TO BE FIELD VERIFIED PRIOR TO COMMENCEMENT OF ANY WORK.

9. PLUMBING LOCATIONS MAY CHANGE IF ROOM DIMENSIONS ARE ALTERED FROM ORIGINAL ARCHITECTURAL DOCUMENTS.

10. LCEI TO APPROVE ALL PLUMBING INSTALLED BY OWNER'S CONTRACTOR PRIOR TO LIFE SUPPORT EQUIPMENT INSTALLATION.

11. ALL AQUARIUM-PLUMING LINES FROM AQUARIUM AREA TO FILTRATION AREA MUST BE NO GRATER THAN 12" UNDER SLAB AND FREE FROM AIRLOCK. IT 'S THE OWNER AND OR PLUMBERS RESPONSIBILITY TO ADHERE TO THIS REQUEST. LIVING COLOR WILL NOT BE LIABLE FOR ANY AIRLOCK AND OR COSTS ASSOCIATED THEREIN. PLEASE CONSULT WITH YOUR LIVING COLOR PROJECT MANAGER FOR MORE CLARIFICATION IF NEEDED.

12. WATER PRESSURE IN COPPER LINES TO THE HEAT EXCHANGER MUST OPERATE BETWEEN A MIN. OF 4 PSI AND A MAX. OF 40 PSI

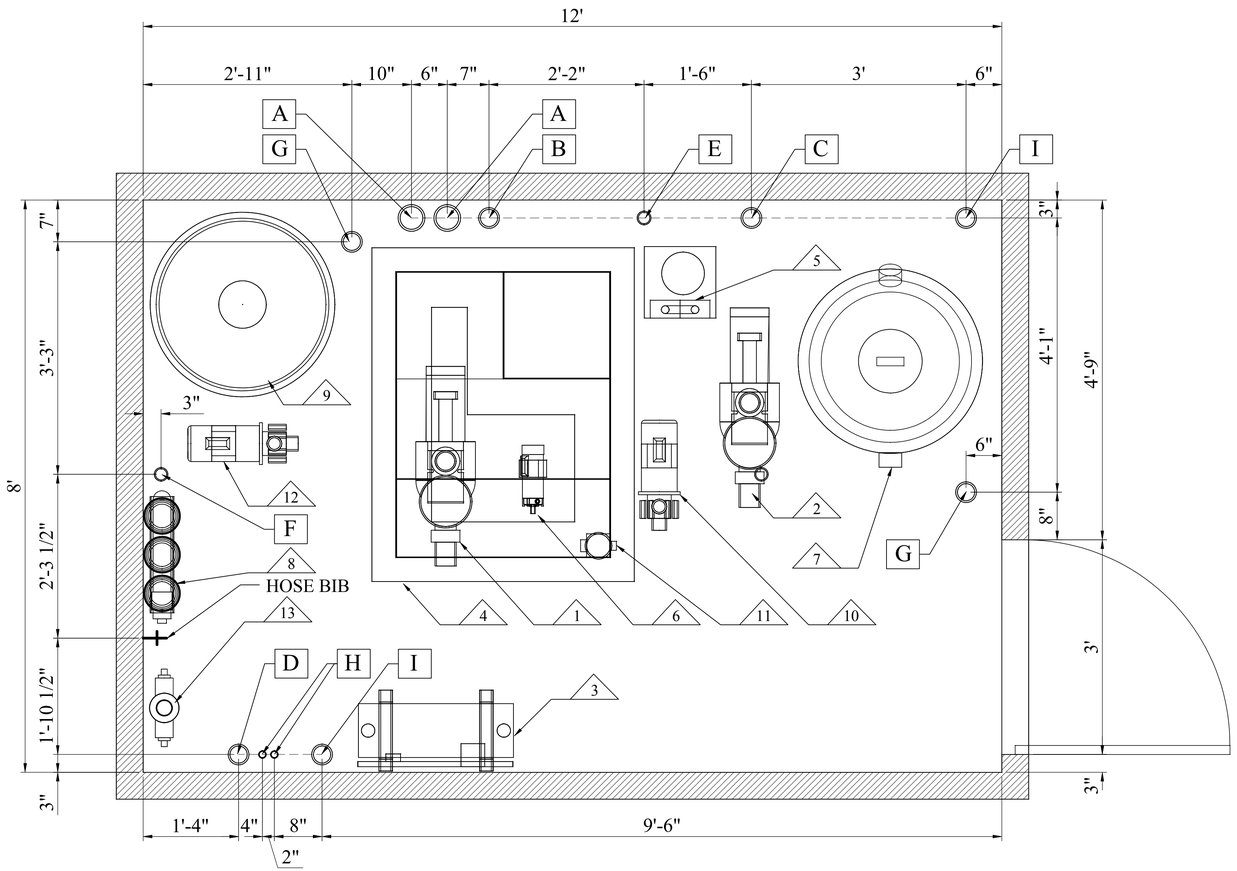

LSS ROOM EQUIPMENT & PLUMBING
PLAN VIEW
SCALE: 1"= 1'-0"
1 A-06

LIFE SUPPORT EQUIPMENT SPECIFICATIONS DEEP WATER TANK

Item	Description - Specification	Vendor	Manufacturer	QB Part Number	Qty.	Specification L	W/Dia	H	In	Out	Volt	Load Amp	HP
1	Open Pumps	RK2	RK2	43052.335 LH	1	28"	9"	15"	2"	2"	220	7	1/2
2	Closed Pumps	RK2	RK2	43102.335 LH	1	28"	9"	15"	2"	2"	220	11	1
3	Heat Exchangers	AL	AquaLogic	HX-24-W	1	26"	14"	24"	2"	2"	110	.5	
4	Open Sump/BioTower	DW	Duraweld	JM-Custom	1	48"	32"	48"					
5	Protein Skimmer	MRC	My Reef Creations	MR-7	1	16"	12"	60"					
6	Protein Skimmer Pump	MRC	Barracuda		1	16"	9"	7"	2"	2"	110	7	1/4
7	Closed Sand Filter	SCP	Pentair	TR-100-140210	1		31"	39"	2"	2"			
8	R/O System	WP	Water Purifcation	Dero-5-100	1		16"	12"	1/4"	1/4";			
9	R/O Storage Vat	TD	Roto Mold	VTO265-31	1		31"	88"					
10	Feeding System Pump	SCP	Hayward	PowerFlo	1	17"	6"	7"	1 1/2"	1 1/2"	110	7	1/2
11	Feeding Canister	RL	Raibow Lifegaurd	AF-93	1		3"	17"	1"	1"			
12	Mix Transfer Pump	SCP	Hayward	PowerFlo	1	17"	6"	7"	1 1/2"	1 1/2"	110	7	1/2
13	UV Sterilizers	AU	Aqua Ultraviolet	SL-Viper 800	1	20"	6"	18"	6"	6"	220	5	
14	Lighting System	EX	EcoXotic	Panarama	9	48"	1"	1"			110	4	

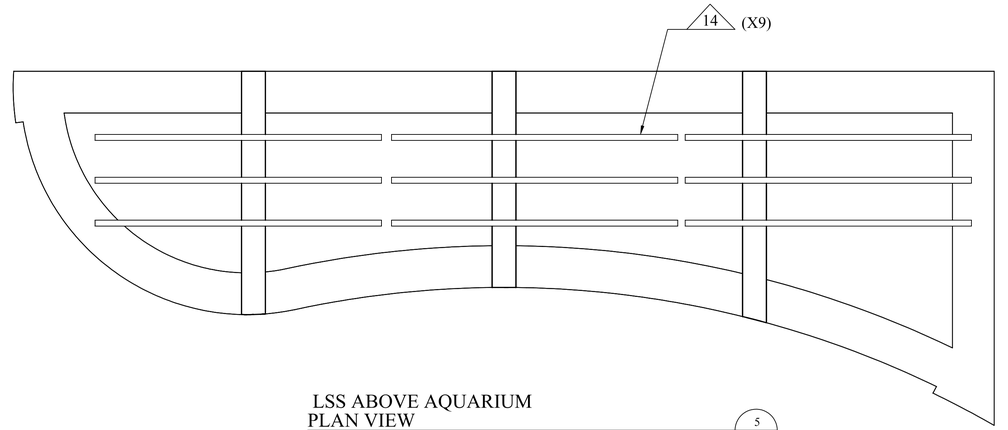

LSS ABOVE AQUARIUM
PLAN VIEW
SCALE: 1"= 1'-0"
5 A-06

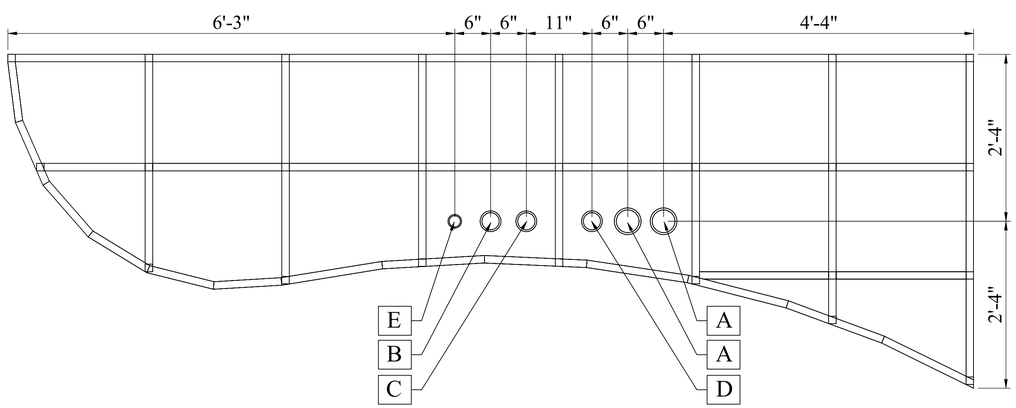

PLUMBING BELOW AQUARIUM
PLAN VIEW
SCALE: 1"= 1'-0"
5 A-06

EGS BA JM MR

Designed By : Project Manager : LSS Design By : Approved By :

Notes :

DRAFTED BY,
STEVENSON DRAFTING &
DESIGN SERVICES L.L.C.

Approval :

Client : The Aqua Vision Tech Aquarium

Location : 35 Chestnut Street, East Bridgewater, MA 02333

Contractor : - -

LIVING COLOR™
CUSTOM AQUARIUMS AND THEMED ENVIRONMENTS
* EXHIBITRY * THEMED ENVIRONMENTS
* ARCHITECTURAL AQUARIUM SYSTEMS
6850 NW 12th Ave. Ft. Lauderdale Fl. 33309
(954) 370-9251 Fax (954) 978-3811

Description : LSS Equipment — Custom Aquarium

Date	Scale	Revision #	Drawing #
04-24-13	AS NOTED	-	6 OF 9

Job #	Auto cad #	Sheet #
1312	A-01	A-06

LIFE SUPPORT EQUIPMENT SPECIFICATIONS DEEP WATER TANK

Item	Description - Specification	Vendor	Manufacturer	QB Part Number	Qty.	Specification L	W/Dia	H	In	Out	Volt	Load Amp	HP
1	Open Pumps	RK2	RK2	43052.335 LH	1	28"	9"	15"	2"	2"	220	7	1/2
2	Closed Pumps	RK2	RK2	43102.335 LH	1	28"	9"	15"	2"	2"	220	11	1
3	Heat Exchangers	AL	AquaLogic	HX-24-W	1	26"	14"	24"	2"	2"	110	.5	
4	Open Sump/BioTower	DW	Duraweld	JM-Custom	1	48"	32"	48"					
5	Protein Skimmer	MRC	My Reef Creations	MR-7	1	16"	12"	60"					
6	Protein Skimmer Pump	MRC	Barracuda		1	16"	9"	7"	2"	2"	110	7	1/4
7	Closed Sand Filter	SCP	Pentair	TR-100-140210	1		31"	39"	2"	2"			
8	R/O System	WP	Water Purifcation	Dero-5-100	1		16"	12"	1/4"	1/4";			
9	R/O Storage Vat	TD	Roto Mold	VTO265-31	1		31"	88"					
10	Feeding System Pump	SCP	Hayward	PowerFlo	1	17"	6"	7"	1 1/2"	1 1/2"	110	7	1/2
11	Feeding Canister	RL	Raibow Lifegaurd	AF-93	1		3"	17"	1"	1"			
12	Mix Transfer Pump	SCP	Hayward	PowerFlo	1	17"	6"	7"	1 1/2"	1 1/2"	110	7	1/2
13	UV Sterilizers	AU	Aqua Ultraviolet	SL-Viper 800	1	20"	6"	18"	6"	6"	220	5	
14	Lighting System	EX	EcoXotic	Panarama	9	48"	1"	1"			110	4	

ELECTRICAL LEGEND

Symbol	Description
⌀	110 V. Duplex Outlet
⌀²	220 V. Duplex Outlet
$	110V. Switch
$²	220V. Switch

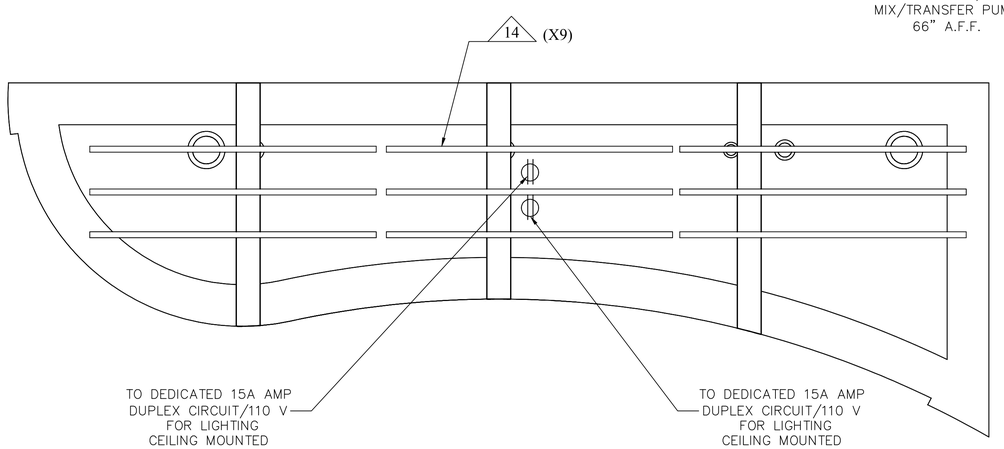

LSS ABOVE AQUARIUM PLAN VIEW (1 / A-07)
SCALE: 1"= 1'-0"

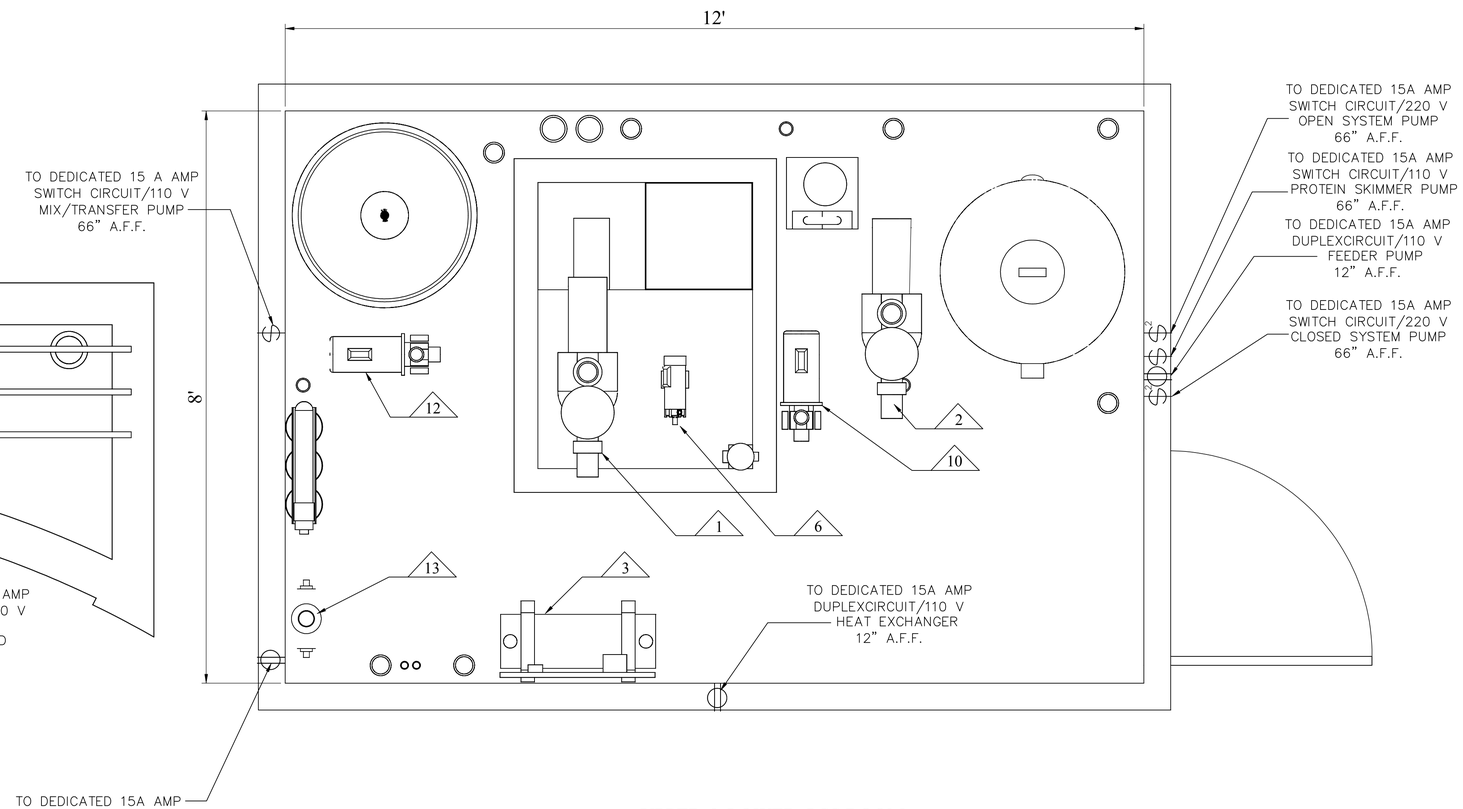

UPPER & LOWER LSS ROOM PLAN VIEW (1 / A-07)
SCALE: 1"= 1'-0"

Designed By : EGS
Project Manager : BA
LSS Design By : JM
Approved By : MR

Notes : DRAFTED BY, STEVENSON DRAFTING & DESIGN SERVICES L.L.C.

Approval :

Client : The Aqua Vision Tech Aquarium
Location : 35 Chestnut Street East Bridgewater, MA 02333
Contractor : -

LIVINGCOLOR™ CUSTOM AQUARIUMS AND THEMED ENVIRONMENTS
* EXHIBITRY * THEMED ENVIRONMENTS
* ARCHITECTURAL AQUARIUM SYSTEMS
6850 NW 12th Ave, Ft. Lauderdale Fl. 33309
(954) 970-9511 Fax (954) 978-3811

Description : Electrical Layout
Custom Aquarium

Date : 04-24-13
Scale : AS NOTED
Revision # -
Drawing # 7 OF 8

Job # 1312
Auto cad # A-01
Sheet # A-07